Click here to return to USGS publications

Techniques of Water-Resources Investigations
of the United States Geological Survey

Chapter A1

METHODS FOR DETERMINATION OF INORGANIC SUBSTANCES IN WATER AND FLUVIAL SEDIMENTS

By Marvin J. Fishman and Linda C. Friedman, Editors

First Edition 1970
Second Edition 1979
Third Edition 1989

Book 5
LABORATORY ANALYSIS

Bromide, titrimetric, hypochlorite oxidation

Parameter and Code:

Bromide, dissolved, I-1125-85 (mg/L as Br): 71870

1. Application

This method may be used to analyze any natural or treated water or brine containing at least 1.0 mg/L of bromide. Highly concentrated brines may require dilution.

2. Summary of method

2.1 The determination of bromide involves the determination of bromide and iodide collectively, and then the determination of iodide alone; bromide is calculated by difference. Bromide and iodide are oxidized to bromate and iodate, respectively, by hypochlorite, and the excess hypochlorite is subsequently decomposed with sodium formate (Kolthoff and others, 1969).

$$3OCl^{-1} + Br^{-1} \rightarrow BrO_3^{-1} + 3Cl^{-1}$$

$$3OCl^{-1} + I^{-1} \rightarrow IO_3^{-1} + 3Cl^{-1}$$

Iodine equivalent to the combined iodate and bromate is then liberated by addition of potassium iodide to an acid solution.

$$BrO_3^{-1} + 6I^{-1} + 6H^{+1} \rightarrow 3I_2 + 3H_2O + Br^{-1}$$

$$IO_3^{-1} + 5I^{-1} + 6H^{+1} \rightarrow 3I_2 + 3H_2O$$

The liberated iodine is titrated with standard thiosulfate with use of starch as the indicator.

$$I_2 + 2S_2O_3^{-2} \rightarrow S_4O_6^{-2} + 2I^{-1}$$

2.2 Iodide alone is determined by oxidation to iodate with bromine in a buffered solution. Iodine equivalent to the iodate is then liberated from added potassium iodide and titrated with thiosulfate as in the combined determination.

3. Interferences

Iron, manganese, and organic material interfere with the basic reactions of the method, but their interferences are removed by preliminary treatment with calcium oxide.

4. Apparatus

4.1 *Buret*, 10-mL capacity.

4.2 *Iodine flasks*, 250-mL capacity.

5. Reagents

5.1 *Acetic acid*, 2.2*M*: Mix 125 mL glacial $HC_2H_3O_2$ (sp gr 1.069) with demineralized water and dilute to 1 L.

5.2 *Bromine water*, saturated: Add to approx 250 mL demineralized water slightly more liquid Br_2 than will dissolve when mixed. Store in a glass-stoppered, actinic-glass bottle.

5.3 *Calcium carbonate*, powder, $CaCO_3$.

5.4 *Calcium oxide*, anhydrous powder, CaO.

5.5 *Hydrochloric acid*, 6*M*: Mix 50 mL concentrated HCl (sp gr 1.19) with demineralized water and dilute to 100 mL.

5.6 *Methyl red indicator solution*, 0.01 g/100 mL: Dissolve 0.01 g water-soluble methyl red in 100 mL demineralized water.

5.7 *Potassium fluoride*, crystals, $KF{\cdot}2H_2O$.

5.8 *Potassium hypochlorite solution*, 4.4 g/L: Dissolve 6.2 g KOH in 100 mL demineralized water; then saturate the solution with bromine-free Cl_2 while continually cooling and stirring. Store in a glass-stoppered, actinic-glass bottle. Prepare fresh daily.

5.9 *Potassium iodide*, crystals, IO_3^{-1}-free: The KI can be tested for IO_3^{-1} by dissolving about 0.1 g in 5 mL demineralized water, acidifying with 1 or 2 drops concentrated H_2SO_4 (sp gr 1.84), and adding 2 to 3 mL starch indicator solution. Immediate appearance of a blue color

indicates the presence of IO_3^{-1}; slow color formation is due to atmospheric oxidation.

5.10 *Sodium acetate solution*, 165 g/L: Dissolve 273 g $NaC_2H_3O_2 \cdot 3H_2O$ in demineralized water and dilute to 1 L.

5.11 *Sodium chloride*, crystals: Free from I^{-1}, IO_3^{-1}, Br^{-1}, and BrO_3^{-1}. The NaCl can be tested for IO_3^{-1} and BrO_3^{-1} by dissolving about 0.1 g in 5 mL demineralized water, acidifying with 1 or 2 drops concentrated H_2SO_4 (sp gr 1.84), and adding 2 to 3 mL starch indicator solution. Immediate appearance of a blue color indicates presence of IO_3^{-1} or BrO_3^{-1}; slow color formation is caused by atmospheric oxidation.

5.12 *Sodium formate solution*, 50 g/100 mL: Dissolve 50 g $NaHCO_2$ in hot demineralized water and dilute to 100 mL. Prepare fresh daily.

5.13 *Sodium molybdate solution*, 1.0 g/100 mL: Dissolve 1.2 g $Na_2MoO_4 \cdot 2H_2O$ in demineralized water and dilute to 100 mL.

5.14 *Sodium thiosulfate solution*, 0.10*N*: Dissolve 25.0 g $Na_2S_2O_3 \cdot 5H_2O$ in carbon dioxide-free, demineralized water; add 1 g Na_2CO_3 and dilute to 1 L.

5.15 *Sodium thiosulfate standard solution*, 0.010*N*: Dilute 100.0 mL 0.10*N* $Na_2S_2O_3$ solution to 950 mL with carbon dioxide-free, demineralized water and standardize against KIO_3 as follows: Dry approx 0.5 g KIO_3 for 2 h at 180°C. Cool and dissolve 0.3567 g in demineralized water, and dilute to 1,000 mL. Pipet 25.00 mL of the KIO_3 solution into a 250-mL iodine flask; then add successively 75 mL demineralized water and 0.5 g KI crystals. After solution is complete, add 10 mL 3.6*M* H_2SO_4. Allow the stoppered flask to stand 5 min in the dark, and then titrate with standard $Na_2S_2O_3$ solution, adding 2 mL starch indicator solution as the end point is approached (light straw color).

$$\text{Normality of } Na_2S_2O_3 = \frac{0.25}{\text{mL } Na_2S_2O_3}$$

5.16 *Starch indicator solution*, stable or "thyodene," powdered (Fisher No. T138 or equivalent).

5.17 *Sulfuric acid*, 3.6*M*: CAUTIOUSLY add 200 mL concentrated H_2SO_4 (sp gr 1.84) to demineralized water, cool, and dilute to 1 L.

6. Procedure

6.1 Remove soluble iron, manganese, and organic matter by adding a slight excess of CaO to approx 400 mL sample; mix, let stand about 1 h, and filter through a dry, moderately retentive filter paper. Discard the first 75 mL of filtrate.

6.2 For the combined Br^{-1} and I^{-1} determination, pipet a volume of the filtrate containing less than 5.0 mg Br^{-1} and I^{-1} (100.0 mL max) into a 250-mL iodine flask, and adjust the volume to approx 100 mL.

6.3 Prepare a blank of approx 100 mL demineralized water, and carry it through the procedure along with the sample.

6.4 Add sufficient NaCl to produce a 3.0 g Cl^{-1} content.

6.5 Add a drop of methyl red indicator solution, and make the solution just acidic with 6*M* HCl.

6.6 Add 10 mL KClO solution, 0.5 mL 6*M* HCl, and sufficient $CaCO_3$ to produce an excess of approx 0.1 g.

6.7 Heat the solution to boiling and maintain this temperature for about 8 min.

6.8 Reduce the excess KClO by adding 2 mL $NaHCO_2$ solution, taking precaution to wash down the sides of the flask with a small amount of hot water. Keep the solution hot for an additional 8 min.

6.9 Cool and add several drops of Na_2MoO_4 solution. If any iron precipitates at this point, add 0.5 g $KF \cdot 2H_2O$.

6.10 Add approx 1 g KI and 10 mL 3.6*M* H_2SO_4, and let stand 5 min in the dark.

6.11 Titrate the liberated I_2 with 0.01*N* $Na_2S_2O_3$ standard solution, adding 2 to 3 mL starch indicator solution as the end point is approached. Disregard a return of the blue color after the end point has been reached.

6.12 For the I^{-1} determination, pipet a volume of filtrate (step 6.1) containing less than 5.0 mg I^{-1} (100.0 mL max) into a 250-mL iodine flask, and adjust the volume to approx 100 mL.

6.13 Prepare a blank of 100.0 mL demineralized water and carry through the procedure along with the sample.

6.14 Add a drop of methyl red indicator solution, and make the solution just acidic with 3.6*M* H_2SO_4.

6.15 Add 15.0 mL $NaC_2H_3O_2$ solution, 5.0 mL 2.2*M* $HC_2H_3O_2$, and sufficient bromine water to produce a light-yellow color; mix and allow to stand 5 min.

6.16 Reduce the excess Br_2 by adding $NaHCO_2$ solution drop by drop until the yellow tinge in the sample disappears; then add an excess of 1 mL.

6.17 Wash the sides of the flask with a small amount of water, and blow out Br_2 vapors with a syringe and a glass tube inserted into the mouth of the flask. If any iron precipitates at this point, add 0.5 g $KI{\cdot}2H_2O$.

6.18 Add approx 1 g KI and 10 mL 3.6*M* H_2SO_4, and let stand 5 min in the dark.

6.19 Titrate the liberated I_2 with 0.010*N* $Na_2S_2O_3$ standard solution, adding 2 to 3 mL starch indicator solution as the end point is approached (light-straw color). Disregard a return of the blue color after the end point has been reached.

7. Calculations

7.1 Determine $Br^{-1}+I^{-1}$ in epL as follows:

$$Br^{-1}+I^{-1}(\text{epL})=\frac{1{,}000}{\text{mL sample}}\times\frac{0.01}{6}\times(\text{mL}_t-\text{mL}_b)$$

7.2 Determine I^{-1} in epL as follows:

$$I^{-1}(\text{epL})=\frac{1{,}000}{\text{mL sample}}\times\frac{0.01}{6}\times(\text{mL}_i-\text{mL}_b).$$

7.3 Determine Br^{-1} in mg/L as follows:

$$Br^{-1}(\text{mg/L})=79.91\times[\text{epL }(I^{-1}+Br^{-1})-\text{epL }I^{-1}]$$

where

epL= equivalents per liter,

mL_b= titrant volume for blank determination,

mL_t= titrant volume for combined determination,

and

mL_i= titrant volume for I^{-1} determination.

8. Report

Report bromide, dissolved (71870), concentrations as follows: less than 10 mg/L, one decimal; 10 mg/L and above, two significant figures.

9. Precision

Single-operator precision of this method (American Society for Testing and Materials, 1984) may be expressed as follows:

$$S_o = 0.0044X$$

where

S_o= single-operator precision, milligrams per liter,

and

X= concentration of bromide, milligrams per liter.

References

American Society for Testing and Materials, 1984, Annual book of ASTM standards, section 11, water: Philadelphia, v. 11.01, p. 482-90.

Kolthoff, I. M., Sandell, E. B., Meehan, E. J., and Bruckenstein, S., 1969, Quantitative chemical analysis (4th ed.): New York, Macmillan, 1199 p.

Bromide, ion-exchange chromatographic, automated

Parameters and Codes:

Bromide, dissolved, I-2057-85 (mg/L as Br): 71870
Bromide, dissolved, I-2058-85 (mg/L as Br): 71870

2. Summary of method

Bromide is determined sequentially with six other anions by ion-exchange chromatography. Ions are separated based on their affinity for the exchange sites of the resin. The separated anions in their acid form are measured using an electrical-conductivity cell. See method I-2057, anions, ion-exchange chromatographic, automated, and method I-2058, anions, ion-exchange chromatographic, low ionic-strength water, automated.

Bromide, ion-exchange chromatographic-electrochemical, automated

Parameter and Code:

Bromide, dissolved, I-2128-85 (mg/L as Br): 71870

1. Application

1.1 This method may be used to analyze atmospheric precipitation and natural water containing at least 0.01 mg/L of bromide. Samples containing more than 1 mg/L need to be diluted.

1.2 Analyses need to be performed on filtered and unacidified samples.

2. Summary of method

Bromide is determined with an ion chromatograph using an ion-exchange resin in combination with a specific eluent to separate the anions. After the solution has passed through the separator column, the sample stream flows through an electrochemical cell, where a fixed potential is applied. Any electroactive species such as bromide having an oxidation-reduction potential near the applied potential will generate a current, which is directly proportional to the concentration of the electroactive species.

3. Interferences

3.1 Chloride is an interference. When chloride ion passes through the detector, a current generates because of the formation of silver chloride on the surface of the silver-working electrode. The eluent stream, which removes silver chloride, generates a negative peak. The higher the chloride concentration, the longer it takes for the peak to return to baseline conditions. The effects of chloride at various levels of bromide are shown in tables 5 and 6. Chloride interferes with bromide if the chloride-to-bromide ratio is greater than 1,000:1 for the analytical range of 0.01 to 0.1 mg/L of bromide. A similar interference is present when the chloride-to-bromide ratio exceeds 5,000:1 for the 0.1 to 1.0 mg/L analytical range. Samples containing greater than 2,000 mg/L of chloride must first be diluted.

3.2 Sulfite elutes at almost the same time as bromide, however, this interference will not affect bromide since any sulfite in the sample will have had time to oxidize to sulfate before analysis. For example, 10 mg/L of sulfite usually oxidizes to sulfate within 120 h.

4. Apparatus

4.1 *Ion Chromatograph*, Dionex Model 12 or equivalent, using the following operating conditions:

Sample loop --------	200 μL
Eluent flow rate ----	138 mL/h (30 percent of full capacity)
Sample pump flow rate	50 percent of full capacity

4.1.1 *Precolumn*, 4×50 mm, fast-run, anion-resin column (Dionex P/N 030831 or equivalent) placed before the separator column to protect the separator column from being fouled by particulates or species strongly retained by the ion-exchange resin.

4.1.2 *Separator column*, 4×250 mm, fast-run, anion separator column packed with low-capacity, pellicular, anion-exchange resin (Dionex P/N 030830 or equivalent) that is styrene divinylbenzene based. This has been found to be suitable for resolving fluoride, chloride, nitrite, orthophosphate, bromide, nitrate, and sulfate.

4.2 *Pulse damper*, installed just before the injection valve to reduce flow pulsation.

4.3 *Electrochemical detector*, Dionex or equivalent, consisting of cell and potentiostat.

4.3.1 The electrochemical cell is installed after the separator ion-exchange column. The cell is composed of a silver-working electrode, a

Table 5.—Recovery of bromide in the presence of chloride for 0.01 to 0.09 mg/L bromide

	Chloride (mg/L)					
	10	20	30	50	70	90
Bromide (mg/L)	Recovery of bromide (percent)					
0.01	100	90	50	40	10	0
.02	100	100	65	50	50	35
.03	100	100	100	80	67	40
.05	100	100	100	100	80	80
.07	100	100	100	100	100	86
.09	100	100	100	100	100	100

Table 6.—Recovery of bromide in the presence of chloride for 0.01 to 0.09 mg/L bromide

	Chloride (mg/L)					
	500	700	1000	1500	2000	2500
Bromide (mg/L)	Recovery of bromide (percent)					
0.1	100	80	70	10	0	0
.2	100	100	100	75	50	10
.3	100	100	100	100	70	17
.4	100	100	100	100	100	28
.5	100	100	100	100	100	50
.6	100	100	100	100	100	53
.7	100	100	100	100	100	57
.8	100	100	100	100	100	60
.9	100	100	100	100	100	61

stainless steel counter electrode and a Ag/AgCl reference electrode (NOTE 1). CAUTION: Samples containing oil and grease damage the membrane.

NOTE 1. It is necessary to refill the reference electrode with NaCl solution saturated with AgCl and to replace the ion-exchange membrane and membrane gasket when the potentiostat cannot be zeroed (high detector output). This happens when the AgCl in the reference electrode cell is depleted and (or) the membrane is damaged. It is important not to introduce any air bubbles while refilling the reference electrode and replacing the membrane; this causes a loss of sensitivity. The silver-working electrode needs to be cleaned once a month. Polish the surface with a small amount of toothpaste on a Kimwipe to remove the gray tarnish, and then rinse with deionized water. It is desirable to have a spare reference electrode to avoid downtime. If there is difficulty in refilling the reference electrode, contact the manufacturer.

4.3.2 The potentiostat operating conditions are as follows:

Applied potential --- 0.10 V (NOTE 2)
Select mode MEAS - ON
Select mode +/- -- +
Off set multiplier --- X1 uA
Meter select ------- Out Put
Output range ------ 100 nA/V

NOTE 2. The applied potiential setting of the potentiostat that gives the optimum sensitivity for bromide will vary with age and condition of the reference electrode, and needs to be determined.

4.4 *Autosampler*, Technicon IV or equivalent, using a proportioning pump to deliver water to the wash receptacle.

4.5 *Integrator*, Spectra Physics SP-4100 or equivalent, using the following operating conditions:

	Bromide 0.01 to 0.1 mg/L	Bromide 0.1 to 1.0 mg/L
Input range	1V	10 V
Chart speed	1 cm/min	1 cm/min
Calibration	0 (linear)	2 (quadratic fit)
PT (Peak threshold)	60,000	1,500
AT (Attenuation)	512	128
PH (Peak height)	1	1
PW (No. of data samples per bunch)	60	60

4.6 For additional information refer to the manufacturer's instruction manual.

5. Reagents

5.1 *Bromide standard solution I*, 1.00 mL= 1.00 mg Br^{-1}: Dissolve 1.2877 g NaBr in demineralized water and dilute to 1,000 mL.

5.2 *Bromide standard solution II*, 1.00 mL= 0.01 mg Br^{-1}: Dilute 10.0 mL bromide standard solution I to 1,000 mL with demineralized water.

5.3 *Bromide standard solution III*, 1.00 mL= 0.001 mg Br^{-1}: Dilute 100 mL bromide standard solution II to 1,000 mL with demineralized water.

5.4 *Bromide working standards*: Prepare 1,000 mL each of a series of bromide working standards by appropriate quantitative dilution of bromide standard solutions II and III.

Bromide standard solutions (mL)	Bromide concentration (mg/L)
10 of III	0.01
50 of III	.05
10 of II	.1
50 of II	.5
100 of II	1.0

5.5 *Eluent*, 0.003*M* sodium bicarbonate-0.0024*M* sodium carbonate (NOTE 3): Dissolve 0.2520 g $NaHCO_3$ and 0.2544 g Na_2CO_3 in demineralized water and dilute to 1 L.

NOTE 3. Eluent concentration may be varied slightly to obtain the same retention times for each anion when a new separator column is used. The $NaHCO_3$ is subject to thermal decomposition and must be weighed without prior drying.

6. Procedure

6.1 Set up ion chromatographic system according to manufacturer's instructions. Equilibrate the column with eluent until a stable baseline is obtained. Allow approx 30 min for equilibration.

6.2 Enter appropriate program into the main program controller of the ion chromatograph according to the manufacturer's instruction. The system is configured so that the ion chromatograph, controls the autosampler and starts the integrator at the beginning of each sample injection.

6.3 Press the LEVEL key of the integrator, which causes the display of the input voltage. Level the integrator at 10 mV or display 1000 by adjusting coarse dial of potentiostat.

6.4 Press the PT EVAL (peak threshold evaluation) key for integrator to evaluate the detector signal for noise and drift.

6.5 Create an information file in the integrator by pressing the DIALOG key. Create File 1 for bromide concentrations between 0.1 to 1.0 mg/L using a quadratic fit. Create File 2 for bromide concentrations less than 0.1 mg/L using a single-point calibration with intercept of zero.

6.6 Place a complete set of standards in the first positions of the tray, beginning with the least concentrated standard, followed by samples. Place individual standards of differing concentrations in every tenth position of the remainder of the tray.

7. Calculations

The integrator automatically computes the concentration of bromide in each sample by comparing its peak height or peak area to the analytical curve. Retention time for bromide is approximately 5.4 min.

8. Report

Report bromide, dissolved (71870), concentrations as follows: less than 1.0 mg/L, nearest 0.01 mg/L; 1.0 mg/L and above, two significant figures.

9. Precision and accuracy

9.1 Analysis of six test samples 10 times each by a single operator over a period of one month resulted in the following:

Mean (mg/L)	Standard deviation (mg/L)	Relative standard deviation (percent)
0.32	0.005	1.6
.22	.005	2.2
.24	.005	2.2
.30	.008	2.6
.50	.008	1.6
.049	.002	4.7

9.2 Recovery of bromide added to ten water samples resulted in the following:

Chloride present (mg/L)	Bromide present (mg/L)	Bromide added (mg/L)	Bromide found (mg/L)	Recovery (percent)
31	0.59	0.5	1.13	108
263	.49	.5	1.03	108
63	.33	.3	.65	107
56	.30	.3	.61	103
2.28	.22	.3	.51	97
5.95	.040	.05	.089	98
4.59	.037	.05	.086	98
4.78	.031	.03	.062	103
4.89	.029	.01	.039	100
5.05	.031	.03	.064	110

References

Fishman, M. J., and Pyen, G. S., 1979, Determination of selected anions in water by ion chromatography: U.S. Geological Survey Water-Resources Investigations, 79-101, 30 p.

Johnson, E. L., and Cathers, E., 1981, Applications of simultaneous detection in IC: 23rd Rocky Mountain Conference, Denver, Colorado.

Small, H., Stevens, T. S., and Bauman, W. C., 1975, Novel ion exchange chromatographic method using conductimetric detection: Analytical Chemistry, v. 47, p. 1801-09.

Bromide, colorimetric, fluorescein, automated-segmented flow

Parameter and Code:
Bromide, dissolved, I-2129-85 (mg/L as Br): 71870

1. Application

This method may be used to analyze natural water containing from 0.010 to 0.40 mg/L of bromide. Samples containing greater concentrations need to be diluted.

2. Summary of method

The sample is buffered to pH 5.6 with an acetic acid buffer solution and then reacted with chloramine T to oxidize the bromide to hypobromous acid. The hypobromous acid formed then reacts with fluorescein to form the pink eosin (tetrabromo fluorescein), which is proportional to the bromide concentration.

$$Br^{-1} + HOCl \rightarrow BrOH + Cl^{-1}$$

$$BrOH + \text{Fluorescein} \rightarrow \text{Tetrabromo Fluorescein (pink)}$$

3. Interferences

Iodide interferes quantitatively, but in most waters the iodide concentration is negligible. It is recommended that a determination for iodide be performed and that the concentration that is found be subtracted from the apparent bromide concentration. Cyanide, as much as 0.50 mg/L, and chloride, as much as 500 mg/L, do not interfere. Thiocyanate interferes linearly, but in most waters its concentration is negligible.

4. Apparatus

4.1 *Technicon AutoAnalyzer II*, consisting of a sampler, proportioning pump, cartridge manifold, colorimeter, voltage stabilizer, recorder, and printer.

4.2 With this equipment the following operating conditions have been found satisfactory for the range from 0.010 to 0.40 mg/L bromide.

Absorption cell ----- 50 mm
Wavelength -------- 520 nm
Cam ---------- 30/h (2/1)

5. Reagents

5.1 *Bromide standard solution I*, 1.00 mL= 0.100 mg Br^{-1}: Dissolve 0.149 g KBr, dried overnight over concentrated H_2SO_4, in demineralized water and dilute to 1,000 mL with demineralized water.

5.2 *Bromide standard solution II*, 1.00 mL= 0.010 mg Br^{-1}: Dilute 100.0 mL bromide standard solution I to 1,000 mL with demineralized water.

5.3 *Bromide working standards*: Prepare a blank and 1000 mL each of a series of bromide working standards by appropriate quantitative dilution of bromide standard solution II as follows:

Bromide standard solution II (mL)	Bromide concentration (mg/L)
1.0	0.010
5.0	.050
10.0	.100
25.0	.250
40.0	.400

5.4 *Buffer solution*: Dissolve 9.426 g NH_4Cl in 500 mL demineralized water and add 57 mL glacial acetic acid (sp. gr. 1.06). Add dropwise, 5*N* KOH solution until the pH of the solution is 5.6. Dilute to 1,000 mL with demineralized water.

5.5 *Chloramine-T solution*, 0.5 g/100 mL: Dissolve 0.500 g chloramine-T in 100 mL of demineralized water. Prepare fresh daily.

5.6 *Fluorescein stock solution*, 0.125 g/100 mL: Dissolve 0.125 g fluorescein in 25 mL 0.1*N* NaOH and dilute to 100 mL with demineralized water. This solution is stable for one week if stored in a light-proof bottle.

5.7 *Fluorescein working solution*: Pipet 10 mL Fluorescein stock solution into a 100-mL volumetric flask; dilute to the mark with demineralized water. This solution must be prepared fresh daily.

5.8 *Sodium hydroxide solution*, 0.1*N*: Dissolve 4.0 g NaOH in demineralized water and dilute to 1 L with demineralized water.

5.9 *Potassium hydroxide solution*, 5.0*N*: CAUTIOUSLY dissolve 280 g KOH in demineralized water, cool, and dilute to 1 L with demineralized water.

6. Procedure

6.1 Set up manifold (fig. 18).

6.2 Allow colorimeter and recorder to warm up for at least 30 min.

6.3 Adjust the baseline to read zero scale divisions on the recorder with all reagents, but with demineralized water in the sample line.

6.4 Place a complete set of standards and a blank in the first positions of the first sample tray, beginning with the most concentrated standard. Place individual standards of differing concentrations in every eighth position of the remainder of this and subsequent sample trays. Fill remainder of each sample tray with unknown samples.

6.5 Begin analysis. When the peak from the most concentrated standard appears on the recorder, adjust the STD CAL control until the flat portion of the peak reads full scale.

7. Calculations

7.1 Prepare an analytical curve by plotting the height of each standard peak versus its respective empirical bromide concentration.

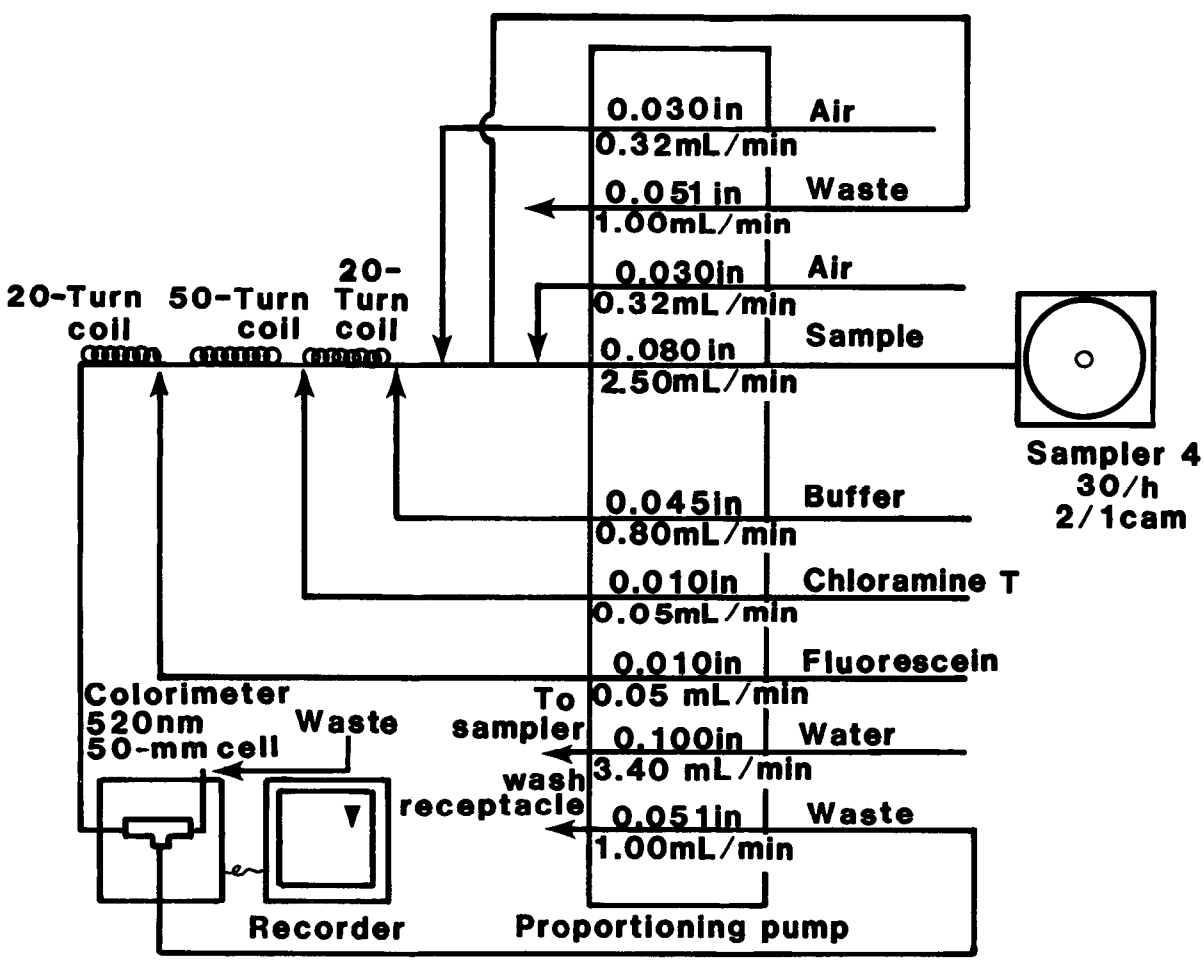

Figure 18.—Bromide, fluorescein manifold

7.2 Compute the apparent bromide concentration of each sample by comparing its peak height to the analytical curve. Any baseline drift that may occur must be taken into account when computing the height of a sample or standard peak.

7.3 Compute the iodide concentration of each sample in accordance with method I- 2371.

7.4 Compute the bromide concentration as follows:

Br^{-1}(mg/L)=

mg/L apparent concentration–mg/L iodide concentration

8. Report

Report bromide, dissolved (71870), concentrations as follows: less than 0.1 mg/L, two decimals; 0.1 mg/L and above, two significant figures.

9. Precision

Single-operator precision for dissolved bromide for six samples expressed in terms of percent relative standard deviation is as follows:

Number of replicates	Concentration (mg/L)	Relative standard deviation (percent)
10	0.010	15.0
10	.050	10.0
10	.100	5.0
10	.350	2.0
10	.550	1.8
10	.860	2.0

References

Marti, V. C., and Arozarena, C. E., 1981, Automated determination of bromide in water: Proceedings Pittsburgh Conference, No. 734.

Thomas, L. C., and Chamberlin, G. J., 1980, Colorimetric chemical analytical methods, 9th: England, The Tintometer Ltd., p. 111-12.

Stenger, V. A., and Kolthorf, I. M., 1935, The detection and colorimetric estimation of micro quantities of bromide: Journal of the American Chemical Society, v. LV11, p. 831-3.

Zitomer, F. and Lambert, J. L., 1963, Spectrophotometric determination of bromide ion in water: Analytical Chemistry, v. 35, p. 1731-34.

Cadmium, atomic absorption spectrometric, chelation-extraction

Parameters and Codes:

Cadmium, dissolved, I-1136-85 (μg/L as Cd): 01025
Cadmium, total recoverable, I-3136-85 (μg/L as Cd): 01027
Cadmium, suspended recoverable, I-7136-85 (μg/L as Cd): 01026

1. Application

1.1 This method may be used to analyze water and water-suspended sediment containing from 1 to 25 μg/L of cadmium. Sample solutions containing more than 25 μg/L need either to be diluted prior to chelation-extraction or to be analyzed by the atomic absorption spectrometric direct method.

1.2 Suspended recoverable cadmium is calculated by subtracting dissolved cadmium from total recoverable cadmium.

1.3 Total-recoverable cadmium in water-suspended sediment needs to undergo a preliminary digestion-solubilization by method I-3485 before being determined.

1.4 If the iron concentration of the sample solution exceeds 25,000 μg/L, determine cadmium by the atomic absorption spectrometric direct method.

2. Summary of method

Cadmium is determined by atomic absorption spectrometry following chelation with ammonium pyrrolidine dithiocarbamate (APDC) and extraction with methyl isobutyl ketone (MIBK). The extract is aspirated into the air-acetylene flame of the spectrometer.

3. Interferences

Concentrations of iron greater than 25,000 μg/L interfere by depressing the cadmium absorption.

4. Apparatus

4.1 *Atomic absorption spectrometer* equipped with electronic digital readout and automatic zero and concentration controls.

4.2 Refer to the manufacturer's manual to optimize instrument for the following:

Grating ----------	Ultraviolet
Wavelength --------	228.8 nm
Source (hollow-cathode or electrodeless-discharge lamp) -----	Cadmium
Oxidant ----------	Air
Fuel ----------	Acetylene
Type of flame -------	Oxidizing

4.3 Different burners may be used according to manufacturers' instructions.

5. Reagents

5.1 *Ammonium pyrrolidine dithiocarbamate solution*, 1 g/100 mL: Dissolve 1 g APDC in 100 mL demineralized water. Prepare fresh daily.

5.2 *Cadmium standard solution I*, 1.00 mL= 100 μg Cd: Dissolve 0.1000 g Cd splatters in a minimum of dilute HNO_3. Heat to increase rate of dissolution. Add 10 mL concentrated HNO_3 (sp gr 1.41) and dilute to 1000 mL with demineralized water.

5.3 *Cadmium standard solution II*, 1.00 mL= 0.50 μg Cd: Dilute 5.0 mL cadmium standard solution I and 1 mL concentrated HNO_3 (sp gr 1.41) to 1,000 mL with demineralized water.

5.4 *Cadmium standard solution III*, 1.00 mL=0.05 μg Cd: Immediately before use, dilute 10.0 mL cadmium standard solution II to 100.0 mL with acidified water. This standard is used to prepare working standards at time of analysis.

5.5 *Citric acid-sodium citrate buffer solution*: Dissolve 126 g citric acid monohydrate and 44 g sodium citrate dihydrate in demineralized water and dilute to 1 L with demineralized water. See NOTE 3 before preparation.

5.6 *Methyl isobutyl ketone (MIBK).*

5.7 *Potassium hydroxide*, 10*M*: Dissolve 56 g KOH in demineralized water, cool, and dilute to 100 mL.

5.8 *Potassium hydroxide solution*, 2.5*M*: Dissolve 14 g KOH in demineralized water and dilute to 100 mL (NOTE 1).

NOTE 1. Alternately, a 2.5*M* NH_4OH solution may be used. Add 167 mL concentrated NH_4OH (sp gr 0.90) to 600 mL demineralized water. Cool and dilute to 1 L.

5.9 *Water, acidified*: Add 1.5 mL concentrated HNO_3 (sp gr 1.41) to 1 L of demineralized water.

6. Procedure

6.1 Clean all glassware used in this determination with warm, dilute HNO_3 (1+9) and rinse with demineralized water immediately before use.

6.2 Pipet a volume of sample solution containing less than 2.5 μg Cd (100 mL max) into a 200-mL volumetric flask, and adjust the volume to approx 100 mL.

6.3 Prepare a blank of acidified water and sufficient standards, and adjust the volume of each to approx 100 mL with acidified water.

6.4 With a pH meter, adjust the pH of each solution to 2.7 (NOTES 2 and 3) with 2.5*M* KOH. Shake for 3 min.

NOTE 2. For water-suspended sediment samples which have been digested, add 1 to 2 mL 10*M* KOH or concentrated NH_4OH (sp gr 0.90) before pH adjustment.

NOTE 3. If an automated titration system is used to adjust the pH, add 2.5 mL citric acid-sodium citrate buffer solution prior to pH adjustment. This will prevent over-shooting the end point in poorly buffered samples.

6.5 Add 2.5 mL APDC solution and mix.

6.6 Add 10.0 mL MIBK and shake vigorously for 3 min.

6.7 Allow the layers to separate and add demineralized water until the ketone layer is completely in the neck of the flask.

6.8 Aspirate the ketone layer within 1 h. Aspirate the ketone layer of the blank to set the automatic zero control. Use the automatic concentration control to set the concentrations of standards. Use at least six standards. Calibrate the instrument each time a set of samples is analyzed and check calibration at reasonable intervals.

7. Calculations

7.1 Determine the micrograms per liter of dissolved or total recoverable cadmium in each sample from the digital display or printer while aspirating each sample. Dilute those samples containing concentrations of cadmium that exceed the working range of the method; repeat the chelation-extraction and multiply by the proper dilution factors.

7.2 To determine the micrograms per liter of suspended recoverable cadmium, subtract dissolved-cadmium concentration from total-recoverable-cadmium concentration.

8. Report

Report cadmium, dissolved (01025), total-recoverable (01027), and suspended-recoverable (01026), concentrations as follows: less than 10 μg/L, nearest microgram per liter, 10 μg/L and above, two significant figures.

9. Precision

9.1 Precision for dissolved cadmium for 22 samples within the range of 2 to 17 μg/L may be expressed as follows:

$$S_T = 0.213X - 0.111$$

where

S_T = overall precision, micrograms per liter, and

X = concentration of cadmium, micrograms per liter.

The correlation coefficient is 0.6914.

9.2 Precision for dissolved cadmium for four of the 22 samples expressed in terms of the percent relative standard deviation is as follows:

Number of laboratories	Mean (μg/L)	Relative standard deviation (percent)
6	2.0	32
11	4.6	24
6	10.2	17
12	17.2	34

9.3 It is estimated that the percent relative standard deviation for total recoverable and suspended recoverable cadmium will be greater than that reported for dissolved cadmium.

Cadmium, atomic absorption spectrometric, direct

Parameters and Codes:

Cadmium, dissolved, I-1135-85 (μg/L as Cd): 01025
Cadmium, total recoverable, I-3135-85 (μg/L as Cd): 01027
Cadmium, suspended recoverable, I-7135-85 (μg/L as Cd): 01026
Cadmium, recoverable-from-bottom-material, I-5135-85 (μg/g as Cd): 01028

1. Application

1.1 This method may be used to analyze water and water-suspended sediment containing at least 10 μg/L of cadmium. Sample solutions containing more than 250 μg/L need either to be diluted or to be read on a less expanded scale. Sample solutions containing less than 10 μg/L need to be analyzed by the atomic absorption spectrometric chelation-extraction method, providing that the interference limits discussed in that method are not exceeded.

1.2 Suspended recoverable cadmium is calculated by subtracting dissolved cadmium from total recoverable cadmium.

1.3 This method may be used to analyze bottom material containing at least 1 μg/g of cadmium.

1.4 Total recoverable cadmium in water-suspended sediment needs to undergo preliminary digestion-solubilization by method I-3485, and recoverable cadmium in bottom material needs to undergo preliminary digestion-solubilization by method I-5485 before being determined.

2. Summary of method

Cadmium is determined by atomic absorption spectrometry by direct aspiration of the sample into an air-acetylene flame without preconcentration or pretreatment of the sample.

3. Interferences

3.1 Individual concentrations of sodium (9,000 mg/L), potassium (9,000 mg/L), magnesium (4,500 mg/L), sulfate (9,000 mg/L), chloride (9,000 mg/L), nitrate (100 mg/L), iron (4×10^6 μg/L), and cobalt, nickel, copper, zinc, lead, and chromium (10,000 μg/L each) do not interfere. Greater concentrations of each constituent were not investigated.

3.2 Calcium at concentrations greater than 1,000 mg/L suppresses the cadmium absorption. At 2,000 mg per liter of calcium, the suppression is approximately 19 percent.

4. Apparatus

4.1 *Atomic absorption spectrometer* equipped with electronic digital readout and automatic zero and concentration controls.

4.2 Refer to the manufacturer's manual to optimize instrument for the following:

Grating	Ultraviolet
Wavelength	228.8 nm
Source (hollow-cathode lamp)	Cadmium
Oxidant	Air
Fuel	Acetylene
Type of flame	Oxidizing

4.3 The Perkin-Elmer, flathead, single-slot burner allows a working range of 10 to 250 μg/L. Different burners may be used according to manufacturers' instructions.

5. Reagents

5.1 *Cadmium standard solution I*, 1.00 mL= 100 μg Cd: Dissolve 0.1000 g Cd splatters in a minimun of dilute HNO_3. Heat to increase rate of dissolution. Add 10 mL concentrated HNO_3 (sp gr 1.41) and dilute to 1,000 mL with demineralized water.

5.2 *Cadmium standard solution II*, 1.00 mL= 1.0 μg Cd: Dilute 10.0 mL cadmium standard solution I and 1 mL concentrated HNO_3 (sp gr 1.41) to 1,000 mL with demineralized water.

5.3 *Cadmium working standards*: Prepare a series of at least six working standards containing from 10 to 250 μg/L of cadmium by appropriate dilution of cadmium standard solutions I and II with acidified water. Prepare fresh daily.

5.4 *Water, acidified*: Add 1.5 mL concentrated HNO_3 (sp gr 1.41) to a liter of demineralized water.

6. Procedure

Aspirate the blank (acidified water) to set the automatic zero control. Use the automatic concentration control to set the concentrations of standards. Use at least six standards. Calibrate the instrument each time a set of samples is analyzed and check calibration at reasonable intervals.

7. Calculations

7.1 Determine the micrograms per liter of dissolved or total recoverable cadmium in each sample from the digital display or printer while aspirating each sample. Dilute those samples containing cadmium concentrations that exceed the working range of the method and multiply by the proper dilution factors.

7.2 To determine micrograms per liter suspended recoverable cadmium, subtract dissolved-cadmium concentration from total-recoverable-cadmium concentration.

7.3 To determine micrograms per gram of cadmium in bottom-material samples, first determine the micrograms per liter of cadmium in each sample as in paragraph 7.1; then

$$\text{Cd } (\mu g/g) = \frac{\mu g/L \text{ Cd} \times \dfrac{\text{mL of original digest}}{1{,}000}}{\text{wt of sample (g)}}$$

8. Report

8.1 Report cadmium, dissolved (01025), total-recoverable (01027), and suspended-recoverable (01026), concentrations as follows: less than 1,000 μg/L, nearest 10 μg/L; 1,000 μg/L and above, two significant figures.

8.2 Report cadmium, recoverable-from-bottom-material (01028), concentrations as follows: less than 10 μg/g, nearest microgram per gram; 10 μg/g and above, two significant figures.

9. Precision

9.1 The standard deviation for dissolved cadmium within the range of 2.8 to 18.4 μg/L for 21 samples was found to be independent of concentration. The 95-percent confidence interval for the average standard deviation of 3.57 μg/L ranged from 3.24 to 3.95 μg/L.

9.2 Precision for dissolved cadmium for five of the 21 samples expressed in terms of the percent relative standard deviation is as follows:

Number of laboratories	Mean (μg/L)	Relative standard deviation (percent)
12	2.8	124
17	4.8	50
15	10.7	19
15	15.7	24
5	18.4	71

9.3 It is estimated that the percent relative standard deviation for total recoverable and suspended recoverable cadmium and for recoverable cadmium from bottom material will be greater than that reported for dissolved cadmium.

9.4 Precision for total recoverable cadmium expressed in terms of the percent relative standard deviation for two water-suspended sediment mixtures is as follows:

Number of laboratories	Mean (μg/L)	Relative standard deviation (percent)
13	5.4	43
9	15.8	25

Cadmium, atomic absorption spectrometric, graphite furnace

Parameter and Code:
Cadmium, dissolved, I-1137-85 (μg/L as Cd): 01025

1. Application

1.1 This method may be used to determine cadmium in low ionic-strength water and precipitation. With deuterium background correction and a 20-μL sample, the method is applicable in the range from 0.02 to 1.0 μg/L. With Zeeman background correction and a 20-μL sample, the method is applicable in the range from 0.1 to 3.0 μg/L. Sample solutions that contain cadmium concentrations exceeding the upper limits must be diluted or preferably be analyzed by the atomic absorption spectrometric direct or chelation- extraction method or by the atomic emission spectrometric ICP method.

1.2 The analytical range and detection limits can be increased or possibly decreased by varying the volume of sample injected or the instrumental settings. Purification of reagents and use of ASTM Type 1 water (Method D-1193, American Society for Testing and Materials, 1984) may result in lower detection limits.

2. Summary of method

Cadmium is determined by atomic absorption spectrometry in conjunction with a graphite furnace containing a graphite platform (Hinderberger and others, 1981). A sample is placed on the graphite platform and a matrix modifier is added. The sample is then evaporated to dryness, charred, and atomized using high-temperature ramping. The absorption signal generated during atomization is recorded and compared with standards.

3. Interferences

3.1 Interferences in low ionic-strength samples, such as precipitation, normally are quite low. In addition, the use of the graphite platform reduces the effects of many interferences. Calcium (25 mg/L), magnesium (8 mg/L), sodium (20 mg/L), sulfate (34 mg/L), and chloride (25 mg/L) do not interfere. Greater concentrations of these constituents were not investigated.

3.2 Precipitation samples usually contain very low concentrations of cadmium. Special precautionary measures must be employed during both sample collection and laboratory determination to prevent contribution from contamination.

4. Apparatus

4.1 *Atomic absorption spectrometer*, for use at 228.8 nm and equipped with background correction, digital integrator to quantitate peak areas, graphite furnace with temperature programmer, and automatic sample injector. The programmer must have high-temperature ramping and stopped-flow capabilities.

4.1.1 Refer to the manufacturer's manual to optimize instrumental performance. The analytical ranges reported in paragraph 1.1 are for a 20-μL sample with 5 μL of matrix modifier (NOTE 1).

NOTE 1. A 20-μL sample generally requires 30 s to dry. Samples that have a complex matrix may require a longer drying and charring time.

4.1.2 *Graphite furnace*, capable of reaching temperatures sufficient to atomize the element of interest. Warning: dial settings frequently are inaccurate and newly conditioned furnaces require temperature calibration.

4.1.3 *Graphite tubes and platforms*. Pyrolytically coated graphite tubes and solid pyrolytic graphite platforms are recommended.

4.2 *Labware*. Many trace metals at very low concentrations have been found to sorb very rapidly to glassware. To preclude this,

fluorinated ethylene propylene (FEP) or Teflon labware may be used. Alternately, glassware, particularly flasks and pipets, may be treated with silicone anti-wetting agent such as Surfacil (Pierce Chemical Co., Rockford, IL, 61105) according to the manufacturer's instructions. Autosampler cups must be checked for contamination. Lancer (1831 Olive St., St. Louis, MO, 63103) polystyrene disposable cups have been found to be satisfactory after acid rinsing. Alternately, reuseable Teflon or FEP cups may be used.

4.3 *Argon*, standard, welder's grade, commercially available. Nitrogen may also be used if recommended by the instrument manufacturer.

5. Reagents

5.1 *Cadmium standard solution I*, 1.00 mL= 1,000 μg Cd: Dissolve 1.0000 g Cd splatters in a minimum of dilute HNO_3. Heat to increase rate of dissolution. Add 10 mL high-purity concentrated HNO_3 (sp gr 1.41), Ultrex or equivalent, and dilute to 1,000 mL with Type 1 water.

5.2 *Cadmium standard solution II*, 1.00 mL= 10.0 μg Cd: Dilute 10.0 mL cadmium standard solution I to 1,000 mL (NOTE 2).

NOTE 2. Use acidified Type 1 water (paragraph 5.7) to make dilutions. All standards must be stored in sealed Teflon or FEP containers. Each container must be rinsed twice with a small volume of standard before being filled. Standards stored for 6 months in FEP containers yielded values equal to those of freshly prepared standards.

5.3 *Cadmium standard solution III*, 1.00 mL= 0.100 μg Cd: Dilute 10.0 mL cadmium standard solution II to 1,000 mL. This standard is used to prepare working standards serially at time of analysis.

5.4 *Cadmium standard solution IV*, 1.00 mL= 0.001 μg Cd: Dilute 10.0 mL cadmium standard solution III to 1,000 mL. This standard also is used to prepare working standards serially at time of analysis.

5.5 *Matrix modifier solution*, 40g $NH_4H_2PO_4$/L: Add 40.0 g $NH_4H_2PO_4$ to 950 mL Type 1 water, mix, and dilute to 1,000 mL. Analyze 20 μL of matrix modifier for cadmium contamination. If the cadmium reading is more than 0.005 absorbance-seconds, purify the solution by chelation with ammonium pyrrolidine dithiocarbamate (APDC) and extraction with methyl isobutyl ketone (MIBK) (NOTE 3). Analyze 20 μL of the purified solution. Repeat extractions until the cadmium level is reduced to the acceptable level. **DO NOT ADD ACID TO THE PURIFIED MATRIX MODIFIER SOLUTION.**

NOTE 3. To purify matrix modifier solution, pour the solution into a Teflon or FEP container. Add 0.25g APDC for each liter of solution. While stirring, adjust the solution to pH 2.9 by dropwise addition of concentrated HNO_3 (sp gr 1.41). Transfer portions of the solution to a separatory funnel, add 100 mL MIBK/liter of solution, and shake vigorously for at least 5 min. Frequently, vent the funnel in a hood. Collect the extracted solution in the FEP container. Repeat the extraction with 50 mL MIBK/liter of solution. Because MIBK can dissolve some plastic autosampler cups, boil the solution for at least 10 min in a silicone-treated or acid-rinsed container covered with a watchglass to remove MIBK.

5.6 *Nitric acid, concentrated*, high-purity, (sp gr 1.41): J. T. Baker "Ultrex" brand HNO_3 has been found to be adequately pure; however, each lot must be checked for contamination. Analyze acidified Type 1 water for cadmium. Add an additional 1.5 mL of concentrated HNO_3/liter of water, and repeat analysis. The integrated signal should not increase by more than 0.001 absorbance-seconds.

5.7 *Water, acidified*, Type 1: Add 1.5 mL high-purity, concentrated HNO_3 (sp gr 1.41) to each liter of water.

5.8 *Water, Type 1*

6. Procedure

6.1 Systematically clean and rinse work areas with deionized water on a regular schedule. Use a laminar flow hood or a "clean room" environment during sample transfers. Ideally, the autosampler and the graphite furnace should be in a clean environment.

6.2 Soak autosampler cups at least overnight in a 1+1 solution of Type 1 water and high-purity nitric acid.

6.3 Rinse the sample cups twice with sample before filling. Place cups in sample tray and

cover. Adjust sampler so that only the injection tip contacts the sample.

6.4 In sequence, inject 20-μL aliquots of blank and working standards plus 5 μL of modifier each and analyze. Analyze the blank and working standards twice. Construct the analytical curve from the integrated peak areas (absorbance-seconds). Generally, the curve should be linear to a peak-absorbance (peak-height) value of 0.40 absorbance units.

6.5 Similarly, inject and analyze the samples twice. Every tenth sample cup should contain either a standard or a reference material.

6.6 Restandardize as required. Minor changes of values for known samples usually indicate deterioration of the furnace tube, contact rings, and/or platform. A major variation usually indicates either autosampler malfunction or residue buildup from a complex matrix in a previous sample.

7. Calculations

Determine the micrograms per liter of cadmium in each sample from the digital display or printer output. Dilute those samples containing concentrations of cadmium that exceed the working range of the method; repeat the analysis, and multiply by the proper dilution factors.

8. Report

Report cadmium, dissolved (01025), concentrations as follows: less than 1.0 μg/L, nearest 0.01 μg/L for deuterium background correction or nearest 0.1 μg/L for Zeeman background correction; 1.0 μg/L and above, two significant figures for both deuterium background correction and Zeeman background correction.

9. Precision

9.1 Analysis of five samples six times each by a single operator using deuterium background correction is as follows:

Mean (μg/L)	Standard deviation (μg/L)	Relative standard deviation (percent)
0.030	0.004	6.9
.106	.004	4.0
.249	.009	3.4
.499	.010	2.0
1.005	.013	1.3

9.2 Analysis of four samples by a single operator using Zeeman background correction is as follows:

Number of replicates	Mean (μg/L)	Standard deviation (μg/L)	Relative standard deviation (percent)
4	0.50	0.115	23
12	1.60	.060	3.8
6	2.10	.089	4.2
14	3.14	.074	2.4

9.3 The precision and bias for the Zeeman background correction were tested on deionized water and tap water (specific conductance 280 μS/cm). A known amount of cadmium was added to each sample, and single-operator precision and bias for six replicates are as follows:

Amount added (μg/L)	Amount found (μg/L)	Standard deviation (μg/L)	Relative standard deviation (percent)	Recovery (percent)
Deionized water				
2.6	2.25	0.05	2.2	87
3.25	2.77	.05	1.8	85
5.0	4.53	.15	3.3	91
5.2	4.42	.17	3.8	85
6.5	5.63	.08	1.4	87
Tap water				
2.6	2.05	.08	3.9	79
3.25	2.55	.41	7.9	80
5.00	4.52	.12	2.7	90
5.2	3.90	.15	3.8	75
6.5	5.22	.41	7.9	80

9.4 The precision and bias for the deuterium background method were tested on deionized water and tap water (specific conductance 280 μS/cm). A known amount of cadmium was added to each sample, and single-operator precision and bias for six replicates are as follows:

Amount added (μg/L)	Amount found (μg/L)	Standard deviation (μg/L)	Relative standard deviation (percent)	Recovery (percent)
Deionized water				
2.6	2.55	0.31	12	98
3.25	2.72	.15	5.5	84
5.0	4.70	.30	6.4	94
5.2	4.97	.44	8.9	96
6.5	5.83	.33	5.6	90
Tap water				
2.6	3.03	1.0	33	117
3.25	2.83	.25	8.8	87
5.0	4.53	.27	6.0	91
5.2	4.23	.21	5.0	81
6.5	5.48	.15	2.7	84

9.5 Interlaboratory precision for dissolved cadmium for 16 samples within the range of

0.62 to 16.2 μg/L, without regard to type of background correction and use of matrix modifiers, if any, may be expressed as follows:

$$S_T = 0.282X + 0.022$$

where

S_T = overall precision, micrograms per liter, and

X = concentration of cadmium, micrograms per liter.

The correlation coefficient is 0.9157.

References

American Society for Testing and Materials, 1984, Annual book of ASTM standards, section 11, water: Philadelphia, v. 11.01, p. 39–41.

Cooksey, M., and Barnett, W. B., 1979, Matrix modification and the method of additions in flameless atomic absorption: Atomic Absorption Newsletter, v. 18, p. 101–5.

Fernandez, F. J., Beatty, M. M., and Barnett, W. B., 1981, Use of the L'vov platform for furnace atomic absorption applications: Atomic Spectroscopy, v. 2, p. 16–21.

Hinderberger, E. J., Kaiser, M. L., and Koirtyohann, S. R., 1981, Furnace atomic absorption analysis of biological samples using the L'vov platform and matrix modification: Atomic Spectroscopy, v. 2, p. 1–11.

Manning, D. C., and Slavin, W., 1983, The determination of trace elements in natural waters using the stabilized temperature platform furnace: Applied Spectroscopy, v. 37, p. 1–11.

Ottaway, J. M., 1982, A revolutionary development in graphite furnace atomic absorption: Atomic Spectroscopy, v. 3, p. 89–92.

Slavin, W., Carnrick, G. R., and Manning, D. C., 1982, Magnesium nitrate as a matrix modifier in the stabilized temperature platform furnace: Analytical Chemistry, v. 54, p. 621–4.

Cadmium, atomic emission spectrometric, ICP

Parameter and Code:

Cadmium, dissolved, I-1472-85 (μg/L as Cd): 01025

2. Summary of method

Cadmium is determined simultaneously with several other constituents on a single sample by a direct-reading emission spectrometric method utilizing an induction-coupled argon plasma as an excitation source. See method I-1472, metals, atomic emission spectrometric, ICP.

Cadmium, total-in-sediment, atomic absorption spectrometric, direct

Parameter and Code:

Cadmium, total, I-5474-85 (mg/kg as Cd): none assigned

2. Summary of method

A sediment sample is dried, ground, and homogenized. The sample is digested with a combination of nitric, hydrofluoric, and perchloric acids in a Teflon beaker heated on a hotplate at 200 °C. Cadmium is determined on the resulting solution by atomic absorption spectrometry. See method I-5474, metals, major and minor, total-in-sediment, atomic absorption spectrometric, direct.

Calcium, atomic absorption spectrometric, direct

Parameters and Codes:

Calcium, dissolved, I-1152-85 (mg/L as Ca): 00915
Calcium, total recoverable, I-3152-85 (mg/L as Ca): none assigned
Calcium, suspended recoverable, I-7152-85 (mg/L as Ca): 81357
Calcium, recoverable-from-bottom-material, dry wt I-5152-85 (mg/kg as Ca): 00917

1. Application

1.1 This method may be used to analyze atmospheric precipitation, water, brines, and water-suspended sediment.

1.2 Two analytical ranges for calcium are included: from 0.01 to 5.0 mg/L and from 1.0 to 60 mg/L. Sample solutions containing calcium concentrations greater than 60 mg/L need to be diluted.

1.3 Suspended recoverable calcium is calculated by subtracting dissolved calcium from total recoverable calcium.

1.4 This method may be used to analyze bottom material containing at least 10 mg/kg of calcium.

1.5 Total recoverable calcium in water-suspended sediment needs to undergo preliminary digestion-solubilization by method I-3485, and recoverable calcium in bottom material needs to undergo preliminary digestion-solubilization by method I-5485 before being determined.

2. Summary of method

2.1 Calcium is determined by atomic absorption spectrometry (Fishman and Downs, 1966). Lanthanum chloride is added to mask interferences.

2.2 This procedure may be automated by the addition of a sampler, a proportioning pump, and a strip-chart recorder or printer or both (fig. 19).

3. Interferences

3.1 Phosphate, sulfate, and aluminum interfere but are masked by the addition of lanthanum. Silica also reportedly interferes. Because

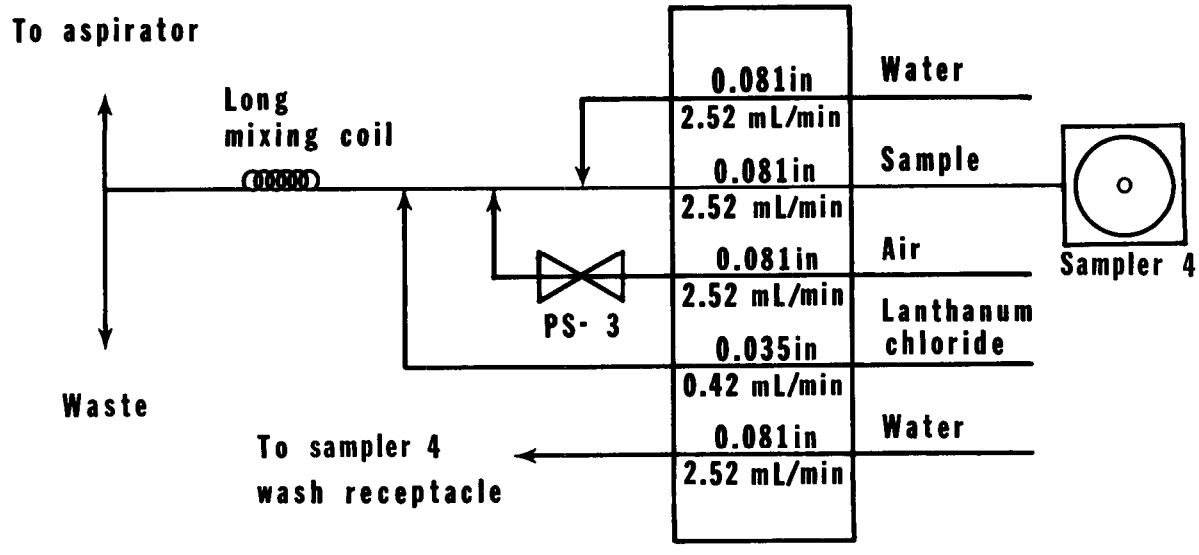

Figure 19.—Calcium manifold

low calcium values result if the pH of the sample is above 7, standards are prepared in hydrochloric acid solution and samples are preserved in the field with use of nitric acid solution. Concentrations of magnesium greater than 1,000 mg/L also cause low calcium values.

3.2 Nitrate interferes, but in the presence of lanthanum chloride-hydrochloric acid solution at least 2,000 mg/L can be tolerated. The addition of nitric acid to the sample causes no problem in the following procedure.

4. Apparatus

4.1 *Atomic absorption spectrometer* equipped with electronic digital readout and automatic zero and concentration controls.

4.2 Refer to the manufacturer's manual to optimize instrument for the following:

Grating	Visible
Wavelength	422.7 nm
Source (hollow-cathode lamp)	Calcium
Oxidant	Air
Fuel	Acetylene
Type of flame	Slightly reducing

4.3 The 50-mm (2-in.), flathead burner allows a working range of 0.01 to 5.0 mg/L. This burner, rotated 90°, allows a working range of 1.0 to 60 mg/L.

4.4 Different burners may be used according to manufacturers' instructions. A nitrous oxide-acetylene flame will provide two to five times greater analytical sensitivity and freedom from chemical interferences; however, sodium or potassium chloride must be added to control ionization of calcium.

5. Reagents

5.1 *Calcium standard solution*, 1.00 mL= 0.500 mg Ca: Suspend 1.250 g $CaCO_3$, dried at 180°C for 1 h before weighing, in demineralized water and dissolve *cautiously* with a minimum of dilute HCl. Dilute to 1,000 mL with demineralized water.

5.2 *Calcium working standards*: Prepare at least six working standards containing either from 0.01 to 5.0 mg/L or from 1.0 to 60 mg/L of calcium by diluting the calcium standard solution. To each working standard add 1.0 mL of $LaCl_3$ solution for each 10 mL of standard. Similarly, prepare a demineralized water blank.

5.3 *Lanthanum chloride solution*, 87 g/L: Mix 29 g of La_2O_3 with a few milliliters of demineralized water to form a slurry. Slowly add 250 mL concentrated HCl (sp gr 1.19) while stirring (reaction may be violent) to dissolve the La_2O_3. Dilute to 500 mL with demineralized water.

6. Procedure

6.1 Add 1.0 mL of $LaCl_3$ solution per 10.0 mL of sample solution.

6.2 Aspirate the blank to set the automatic zero control. Use the automatic concentration control to set the concentrations of standards. Use at least six standards. Calibrate the instrument each time a set of samples is analzyed and check calibration at reasonable intervals.

7. Calculations

7.1 Determine the milligrams per liter of dissolved or total recoverable calcium in each sample from the digital display or printer while aspirating each sample. Dilute those samples containing calcium concentrations that exceed the working range of the method and multiply by the proper dilution factors.

7.2 To determine milligrams per liter of suspended recoverable calcium, subtract dissolved-calcium concentration from total-recoverable-calcium concentration.

7.3 To determine milligrams per kilogram of calcium in bottom-material samples, first determine the milligrams per liter of calcium in each sample as in paragraph 7.1; then

$$\text{Ca (mg/kg)} = \frac{\text{mg/L Ca} \times \dfrac{\text{mL of original digest}}{1000}}{\text{wt of sample (kg)}}$$

8. Report

8.1 Report calcium, dissolved (00915), total-recoverable (none assigned), and suspended-recoverable (81357), concentrations as follows: less than 1.0 mg/L, two decimals; 1.0 to 10 mg/L, one decimal; 10 mg/L and above, two significant figures.

8.2 Report calcium, recoverable-from-bottom-material (00917), concentrations as follows: less than 1,000 mg/kg, nearest 10 mg/kg; 1,000 mg/kg and above, two significant figures.

9. Precision

9.1 Precision for dissolved calcium for 37 samples within the range of 0.84 to 184 mg/L may be expressed as follows:

$$S_T = 0.087X - 0.249$$

where

S_T = overall precision, milligrams per liter, and

X = concentration of calcium, milligrams per liter.

The correlation coefficient is 0.8632.

9.2 Precision for dissolved calcium for five of the 37 samples expressed in terms of the percent relative standard deviation is as follows:

Number of laboratories	Mean (mg/L)	Relative standard deviation (percent)
20	0.84	24
14	10.7	6
45	50.1	8
23	110	8
36	184	10

9.3 Precision for dissolved calcium within the range of 0.05 to 5.0 mg/L in terms of the percent relative standard deviation by a single operator is as follows:

Number of replicates	Mean (mg/L)	Relative standard deviation (percent)
8	0.052	40.4
8	1.02	5.9
8	1.85	10.3
8	5.05	1.0

9.4 It is estimated that the percent relative standard deviation for total recoverable and suspended recoverable calcium and for recoverable calcium from bottom material will be greater than that reported for dissolved calcium.

Reference

Fishman, M. J., and Downs, S. C., 1966, Methods for analysis of selected metals in water by atomic absorption: U.S. Geological Survey Water-Supply Paper 1540-C, p. C26-C28.

Calcium, atomic absorption spectrometric, direct-EPA

Parameter and Code:

Calcium, total recoverable, I-3153-85 (mg/L as Ca): 00916

1. Application

1.1 This method may be used to analyze water-suspended sediment. Sample solutions containing from 0.1 to 60 mg/L of calcium may be analyzed without dilution; whereas, those containing more than 60 mg/L need to be diluted.

1.2 For ambient water, analysis may be made on a measured portion of the acidified water-suspended sediment sample.

1.3 For all other waters, including domestic and industrial effluent, the atomic absorption procedure must be preceded by a digestion-solubilization as specified below. In cases where the analyst is uncertain about the type of sample, the digestion-solubilization procedure must be used.

2. Summary of method

2.1 Calcium is determined by atomic absorption spectrometry (Fishman and Downs, 1966). Lanthanum chloride is added to mask interferences.

2.2 Effluent samples must undergo a preliminary nitric acid digestion followed by a hydrochloric acid solubilization.

3. Interferences

3.1 Phosphate, sulfate, and aluminum interfere but are masked by the addition of lanthanum. Silica reportedly also interferes. Because low calcium values result if the pH of the sample is above 7, standards are prepared in hydrochloric acid solution and samples are preserved in the field with use of nitric acid solution. Concentrations of magnesium greater than 1,000 mg/L also cause low calcium values.

3.2 Nitrate interferes, but in the presence of lanthanum chloride-hydrochloric acid solution, at least 2,000 mg/L can be tolerated. The addition of nitric acid to the sample as a preservative at the time of collection causes no problem in the following procedure. Samples should be evaporated just to dryness following nitric acid digestion to avoid any possible nitrate interference.

4. Apparatus

4.1 *Atomic absorption spectrometer* equipped with electronic digital readout and automatic zero and concentration controls.

4.2 Refer to the manufacturer's manual to optimize instrument for the following:

Grating ----------	Visible
Wavelength --------	422.7 nm
Source (hollow-cathode lamp) ----------	Calcium
Oxidant ----------	Air
Fuel ----------	Acetylene
Type of flame -------	Slightly reducing

4.3 Different burners may be used according to manufacturers' instructions. A nitrous oxide-acetylene flame provides 2 to 5 times greater sensitivity and freedom from chemical interferences; however, sodium or potassium chloride must be added to control ionization of calcium.

5. Reagents

5.1 *Calcium standard solution*, 1.00 mL= 0.500 mg Ca: Suspend 1.250 g $CaCO_3$, dried at 180 °C for 1 h before weighing, in demineralized water and dissolve *cautiously* with a minimum of dilute HCl. Dilute to 1,000 mL with demineralized water.

5.2 *Calcium working standards*: Prepare a series of at least six working standards containing from 0.1 to 60 mg/L of calcium by dilution of calcium standard solution. To each working

standard add 1.0 mL of $LaCl_3$ solution for each 10 mL of standard.

5.3 *Hydrochloric acid*, 6*M*: Dilute 500 mL concentrated HCl (sp gr 1.19) to 1 L with demineralized water.

5.4 *Hydrochloric acid*, 0.3*M*: Dilute 25 mL concentrated HCl (sp gr 1.19) to 1 L with demineralized water.

5.5 *Lanthanum chloride solution*, 87 g/L: Mix 29 g La_2O_3 with a few milliliters of demineralized water to form a slurry. Slowly add 250 mL concentrated HCl (sp gr 1.19) while stirring (reaction may be violent) to dissolve the La_2O_3. Dilute to 500 mL with demineralized water.

5.6 *Nitric acid*, concentrated (sp gr 1.41).

6. Procedure

6.1 Transfer the entire sample to a beaker.

6.2 Rinse the sample bottle with 3 mL concentrated HNO_3 for each 100 mL of sample and add to the beaker. Prepare a blank using 3 mL concentrated HNO_3 per 100 mL demineralized water.

6.3 Evaporate samples and blank to dryness on a hotplate, making sure the samples do not boil.

6.4 Cool and add an additional 3 mL concentrated HNO_3 to the beaker. Cover with a watchglass, return to the hotplate, and gently reflux the sample.

6.5 Continue heating, adding additional acid as necessary, until the digestion is complete (indicated by a light-colored residue). Evaporate just to dryness.

6.6 Add 6 mL 6*M* HCl solution per 100 mL of original sample and warm the beaker to dissolve the residue.

6.7 Wash the watchglass and beaker with demineralized water and filter the sample (Whatman No. 41 or equivalent), rinsing the filter with hot, 0.3*M* HCl. Dilute to the original volume with demineralized water.

6.8 Add 1.0 mL lanthanum chloride solution per 10.0 mL of sample.

6.9 Aspirate the blank to set the automatic zero control. Use the automatic concentration control to set the concentrations of standards. Use at least six standards. Calibrate the instrument each time a set of samples is analyzed and check calibration at reasonable intervals.

7. Calculations

Determine the milligrams per liter of total recoverable calcium in each sample from the digital display or printer while aspirating each sample. Dilute those samples containing calcium concentrations that exceed the working range of the method and multiply by the proper dilution factors.

8. Report

Report calcium, total-recoverable (00916), concentrations as follows: less than 10 mg/L, one decimal; 10 mg/L and above, two significant figures.

9. Precision

It is estimated that the percent relative standard deviation for total recoverable calcium over the range of the method will be greater than 8 percent.

References

Fishman, M. J., and Downs, S. C., 1966, Methods for analysis of selected metals in water by atomic absorption: U.S. Geological Survey Water-Supply Paper 1540-C, p. C26-C28.

U.S. Environmental Protection Agency, 1979, Methods for chemical analysis of water and wastes: Cincinnati, U.S. Environmental Protection Agency, p. 215.1-1.

Calcium, atomic emission spectrometric, ICP

Parameter and Code:

Calcium, dissolved, I-1472-85 (mg/L as Ca): 00915

2. Summary of method

Calcium is determined simultaneously with several other constituents on a single sample by a direct-reading emission spectrometric method utilizing an induction-coupled argon plasma as an excitation source. See method I-1472, metals, atomic emission spectrometric, ICP.

Calcium, total-in-sediment, atomic absorption spectrometric, direct

Parameters and Codes:

Calcium, total, I-5473-85 (mg/kg as Ca): none assigned
Calcium, total, I-5474-85 (mg/kg as Ca): none assigned

2. Summary of method

2.1 A sediment sample is dried, ground, and homogenized. The sample is then treated and analyzed by one of the following techniques.

2.1.1 The sample is fused with a mixture of lithium metaborate and lithium tetraborate in a graphite crucible in a muffle furnace at 1000 °C. The resulting bead is dissolved in acidified, boiling, demineralized water, and calcium is determined by atomic absorption spectrometry. See method I-5473, metals, major, total in sediment, atomic absorption spectrometric, direct.

2.1.2 The sample is digested with a combination of nitric, hydrofluoric, and perchloric acids in a Teflon beaker heated on a hotplate at 200 °C. Calcium is determined on the resulting solution by atomic absorption spectrometry. See method I-5474, metals, major and minor, total-in-sediment, atomic absorption spectrometric, direct.